6524

WELL LIGHT FIXTURE

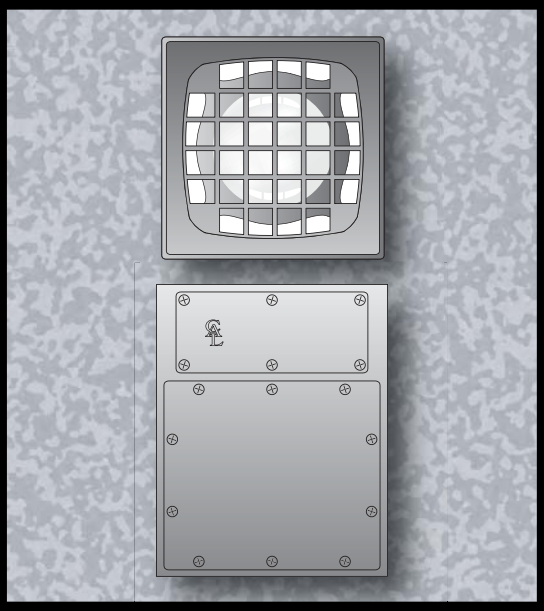

SPECIFICATIONS

FIXTURE: **ALUMINUM-**CONSTRUCTED OF PRIMARY 356 CAST ALUMINUM ALLOY.

LENS: CLEAR-CONVEX, 1/4" TEMPERED GLASS.

GASKETING: **LENS GASKET-**50 S.D.H. "A" SCALE HIGH TEMPERATURE EXTRUDED SILICONE. **SPLICE/BALLAST COMPARTMENT GASKET-**60 S.D.H. "A" SCALE-DIE CUT NEOPRENE.

LAMP HOLDER: 4KV PORCELAIN MEDIUM BASE.

LAMP: (BY OTHERS)

BALLAST: HIGH POWER FACTOR AUTOTRANSFORMER -20° F STARTING TEMPERATURE.

FASTENERS: 18-8 STAINLESS STEEL OR SILICONE BRONZE.

WIRING COMPONENTS: 14 GAUGE 200°C TEMPERATURE RATING. 1/4"-20 GROUNDING LUG PROVIDED.

CONDUIT: STANDARD 3/4" SWEEP AND CONNECTOR SECTION PROVIDED FROM THE SPLICE COMPARTMENT TO THE BOTTOM OF THE TRANSITE TUBE.

SPLICE BOX: (INC MODEL) CONSTRUCTED OF PRIMARY 356 CAST ALUMINUM. TWO (2) 3/4" NPT CONDUIT ENTRIES PROVIDED AT BOTTOM.

BALLAST BOX: (HID MODEL) CONSTRUCTED OF PRIMARY 356 CAST ALUMINUM. TWO (2) 3/4" NPT CONDUIT ENTRIES PROVIDED AT BOTTOM OF THE SPLICE COMPARTMENT. BALLAST COMPARTMENT ISOLATED FROM SPLICE COMPARTMENT BY AN ANTI-WICKING CHAMBER WHICH IS SEALED WITH AN EPOXY BASED RESIN.

TRANSITE: HEAVY WALL ABS PIPE (8" ID. DIAMETER)

FINISH: 3 MILS TGIC THERMOSET EPOXY POWDER COATING. TRANSITE TUBE-NATURAL COATING.

TESTING: FACTORY UNDER WATER POROSITY PRESSURE TEST TO 10 P.S.I.

FACTORY CERTIFIED UNDER WATER LEAK PREVENTION TEST ON 100% OF ALL FINISHED GOODS.

ETL LISTED FOR WET LOCATION AND CONCRETE POUR APPLICATIONS.

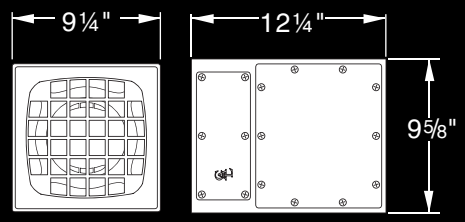

TOP VIEW

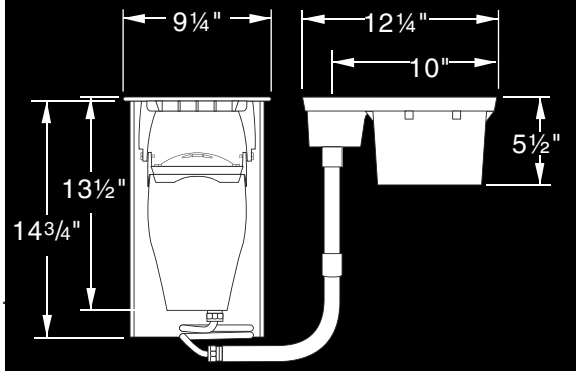

SIDE VIEW

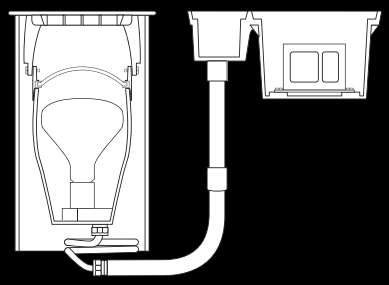

CROSS SECTION

ETL Listed

USA ARCHITECTURAL LIGHTING
660 West Avenue O, Palmdale, CA. 93551
Ph. (661) 233-2000 Fax. (661) 233-2001
www.usaltg.com

6524

WELL LIGHT FIXTURE

TYPE:_____

TOP VIEW

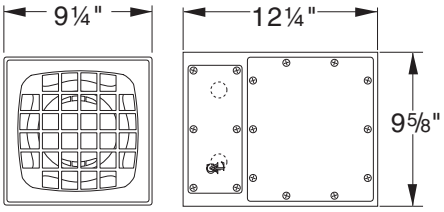

SIDE VIEW

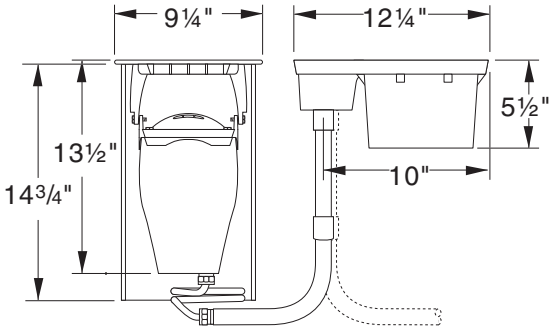

CROSS SECTION

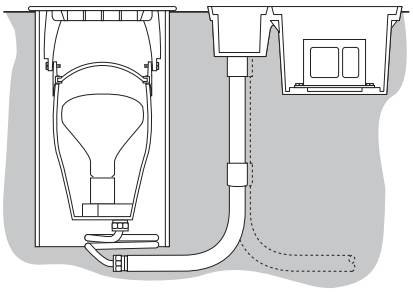

ORDERING INFORMATION

MODEL NO. : 6524	PART NUMBERS	FINISH
MODEL NO. :	**PART NUMBERS**	**FINISH**
6 5 2 4	☐ **6524-INC., PAR 38, 250W** ☐ **6524-INC., R-40, 300W** ☐ **6524-MV 50, E-17, 50W** ☐ **6524-MV 75, E-17, 75W** ☐ **6524-MV 100, PAR 38, 100W** ☐ **6524-MV 175, R-40, 175W** ☐ **6524-HPS-35, E-17, 35W** ☐ **6524-HPS-50, E-17, 50W** ☐ **6524-HPS-70, E-17, 70W** ☐ **6524-HPS-100, E-17, 100W** ☐ **6524-HPS-150, E-17, 150W** ☐ **6524-MH 35, PAR 20/30, 35W** ☐ **6524-MH 50, E-17, 50W** ☐ **6524-MH-70, PAR 38, 70W** ☐ **6524-MH-100, PAR 38, 100W** ☐ **6524-MH-150, PAR 38, 150W** ☐ **6524-MH 175, R-40, 175W**	☐ DARK BRONZE. . . . **DB** (STANDARD COLOR) ☐ BLACK. . . . . **BK** ☐ WHITE. . . . . **WT** ☐ ALUMINUM. . . . . **AL**

US ARCHITECTURAL. RESERVES THE RIGHT TO MAKE CONTINUED PRODUCT DESIGN AND CONSTRUCTION IMPROVEMENTS WHICH MAY AFFECT THE PRODUCT ILLUSTRATED

USA ARCHITECTURAL LIGHTING
660 West Avenue O, Palmdale, CA. 93551
Ph. (661) 233-2000 Fax. (661) 233-2001
www.usaltg.com