SOLID STATE AREA LIGHTING

B3200 SERIES-LED

S P E C I F I C A T I O N S

PROJECT NAME:

PROJECT TYPE:

HOUSING and RISER
Durable, corrosion resistant cast aluminum (A356 alloy;
< 0.2% Cu) base, unlit riser and top cap, minimum .250" wall thickness. Lit riser is extruded, minimum .188" wall thickness. All visible welds are blended, all exposed hardware is stainless steel.

LED POWER ARRAY
Three-dimensional array consisting of 6 individual LED tubes fastened to a retaining plate equally spaced to provide 360° of even illumination output. Each LED tube consists of a circuit board populated with a multiple of LED's which is fastened to a radial aluminum heat sink. A white polycarbonate lens and end caps protect each LED tube's internal components and provides diffusion to prevent shadowing and striations.

OPAL LENS (WA)
Opal acrylic lens is located at the recess of the vertical flutes, protects the LED Module and provides uniform, diffuse illumination.

LED DRIVER
UL and cUL recognized High Power Factor, Constant Current LED drivers operate on input voltages from 120-277VAC, 50/60hz and is mechanically fastened to a retaining bracket. 347V and 480V options may utilize a step down transformer to the LED driver. Driver. Main power quick disconnect provided. Driver has a minimum 4KV of internal surge protection. Consult factory for other voltages. Dimming and High-Low Driver options available. 10KV & 20KV Surge Protector optional.

LED EMITTERS
High Output LED's are driven at 350mA for nominal 1 Watt output each. 70CRI Minimum. LED's are available in standard Neutral White (4000K), or optional Cool White (5000K) or Warm White (3000K). Consult Factory for other LED options.

FINISH
Electrostatically applied TGIC Polyester Powder Coat on substrate prepared with 20 PSI power wash at 140°F. Four step media blast and iron phosphate pretreatment for protection and paint adhesion. 400°F bake for maximum hardness and durability.

B32EL-CAP

PATENT PENDING

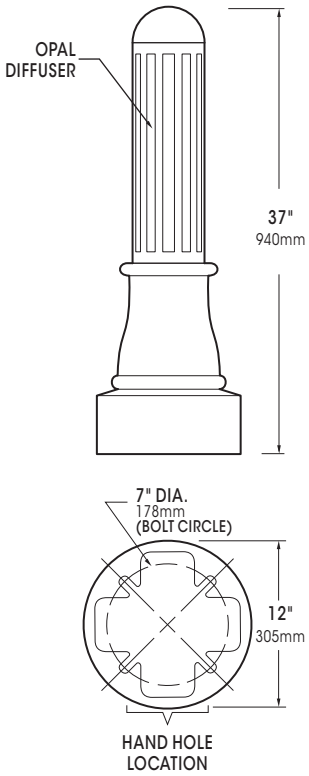

U.L. Listed for wet location

MADE IN THE USA

2014176

Sun Valley Lighting

660 West Avenue O, Palmdale, CA 93551
Phone (661) 233-2000 Fax (661) 233-2001
www.usaltg.com

SUN VALLEY LIGHTING

B3200 SERIES-LED

SPECIFICATIONS

GROUND MOUNTING

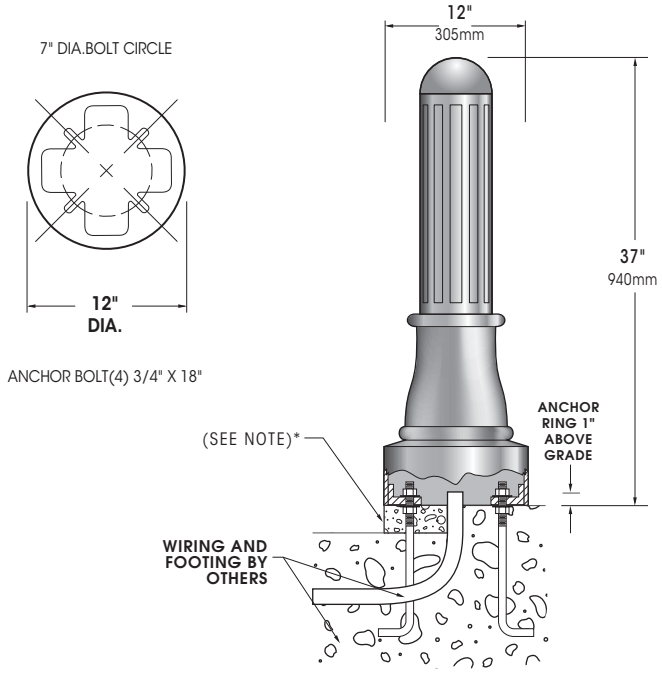

*When mounting in soil, anchor bolt fasteners and other hardware must be protected from soil by grouting.

LED MODULE

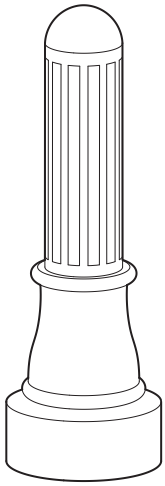

B32EL-CAP-LED

VERTICAL POWER ARRAY™
Available in:
36 LED & 24 LED

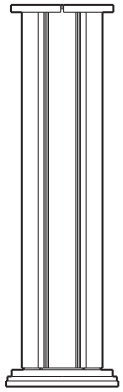

VPA - Vertical Array

Spec/Order Example: B32EL-CAP-VPA-SYM/36LED480/RAL-7004-S

LIGHTED SPEC/ORDERING INFORMATION

MODEL	OPTICS	# of LED's	COLOR TEMP - CCT	VOLTAGE	FINISH	OPTIONS

MODEL	OPTICS	LED			FINISH	OPTIONS
LIGHTED	**VERTICAL POWER ARRAY** OPAL ACRYLIC LENS	**# of LEDs**	**COLOR TEMP - CCT**	**VOLTAGE**	**STANDARD TEXTURED FINISH**	
☐ **B32EL-CAP**	☐ VERTICAL ARRAY . . . . . **VPA-SYM**	☐ **36LED** (42 Watts) ☐ **24LED** (28 Watts) WATTS ARE MAX INPUT WATTS	☐ **NW** (4000K) Standard ☐ **CW** (5000K) ☐ **WW** (3000K) OTHER LED COLORS AVAILABLE CONSULT FACTORY	☐ **120** ☐ **208** ☐ **240** ☐ **277** ☐ **347** ☐ **480**	☐ BLACK **RAL-9005-T** ☐ WHITE **RAL-9003-T** ☐ GREY **RAL-7004-T** ☐ DARK BRONZE **RAL-8019-T** ☐ GREEN **RAL-6005-T** FOR SMOOTH FINISH REPLACE SUFFIX "T" WITH SUFFIX "S" (EXAMPLE: RAL-9500-S) SEE USALTG.COM FOR ADDITIONAL COLORS	INTERNAL HOUSE SIDE SHIELD ☐ 90° . . . . . **HS90** ☐ 135° . . . . . **HS135** ☐ 180° . . . . . **HS180** ☐ DIMMABLE DRIVER(S) (0-10V). . . . . **DIM** ☐ HIGH-LOW DIMMING FOR HARDWIRED SWITCHING OR NON-INTEGRATED MOTION SENSOR . . . . . **HLSW** ☐ 10KV SURGE PROTECTOR. . . . . **10SP** ☐ 20KV SURGE PROTECTOR (240V & 480V Only) . . . **20SP** ☐ DUPLEX RECEPTACLE . . . **DUP** ☐ GROUND FAULT RECEPTACLE . . . . . **GFI** ☐ MAILBOX - SINGLE . . . . . **MBS** ☐ MAILBOX - DOUBLE . . . . **MBD** ☐ BOLLARD EYE BOLT . . . . **BEB** ☐ BALL CAP. . . . . **BAL**

Sun Valley Lighting

660 West Avenue O, Palmdale, CA 93551
Phone (661) 233-2000 Fax (661) 233-2001
www.usaltg.com

SUN VALLEY LIGHTING

B3200 SERIES-LED

SPECIFICATIONS

HOUSING and RISER
Durable, corrosion resistant cast aluminum (A356 alloy;< 0.2% Cu) base, riser and top cap, minimum .250" wall thickness. All visible welds are blended, all exposed hardware is stainless steel.

FINISH
Electrostatically applied TGIC Polyester Powder Coat on substrate prepared with 20 PSI power wash at 140°F. Four step media blast and iron phosphate pretreatment for protection and paint adhesion. 400°F bake for maximum hardness and durability.

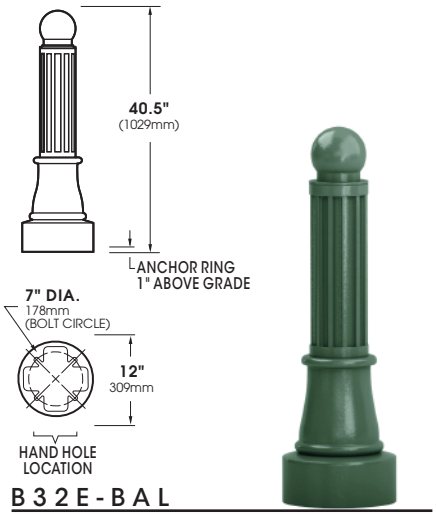

B32E-BAL

PATENT PENDING

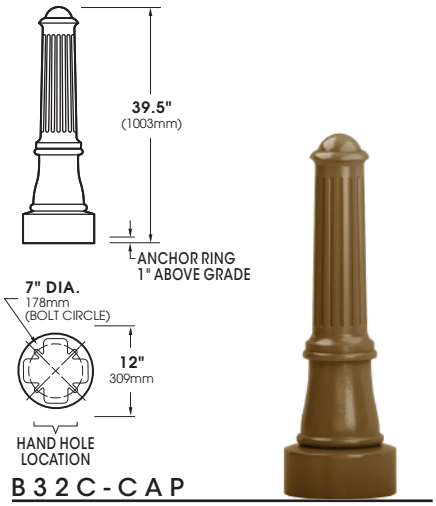

B32C-CAP

PATENT PENDING

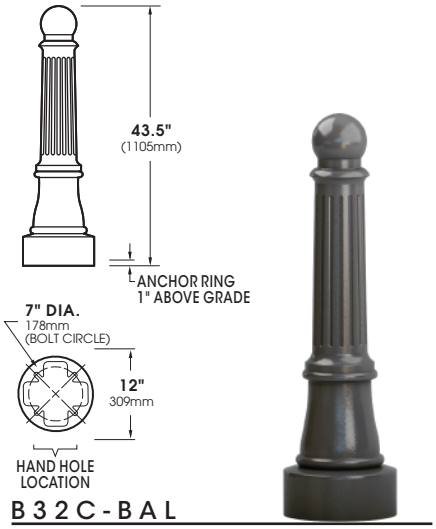

B32C-BAL

PATENT PENDING

ACCESSORIES

MBS
MAILBOX
SINGLE

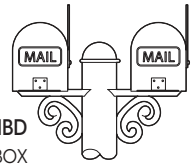

MBD
MAILBOX
DOUBLE

Mailboxes may be mounted post top or side mount.

Mailboxes are of durable, corrosion resistant, cast aluminum (A356 alloy;<.02% copper) and painted to match the decorative bollard.

Mailboxes include nonlocking pull latch and cast flag.

DUP or GFI
DUPLEX OR G.F.I.
RECEPTACLE
WITH COVER

Specify Duplex or GFCI receptacle to mount in the outlet provision. Standard cover supplied.nd location.

BEB
BOLLARD
EYE BOLT

Eyebolts for barrier chain or cord. Specify eyebolt(s) height and location.

CAP*
DOME CAP
*(STANDARD)

BAL
BALL CAP

Unlit Example: B32C-CAP/RAL-6005-S

UN-LIGHTED SPEC/ORDERING INFORMATION

MODEL	FINISH	ACCESSORIES

MODEL

UN-LIGHTED

- ☐ **B32E-BAL**
- ☐ **B32C-CAP**
- ☐ **B32C-BAL**

TO CONFIGURE, SHOW MODEL, FINISH AND ANY PERTINENT ACCESSORIES

FINISH

STANDARD TEXTURED FINISH

- ☐ BLACK **RAL-9005-T**
- ☐ WHITE **RAL-9003-T**
- ☐ GREY **RAL-7004-T**
- ☐ DARK BRONZE **RAL-8019-T**
- ☐ GREEN **RAL-6005-T**

FOR SMOOTH FINISH REPLACE SUFFIX "T" WITH SUFFIX "S" (EXAMPLE: RAL-9500-S)

SEE USALTG.COM FOR ADDITIONAL COLORS

ACCESSORIES

- ☐ MAILBOX - SINGLE . . . . . **MBS**
- ☐ MAILBOX-DOUBLE . . . . . **MBD**
- ☐ DUPLEX RECEPTACLE . . . . . **DUP**
- ☐ GROUND FAULT RECEPTACLE . . . . . **GFI**
- ☐ BALL CAP. . . . . **BAL**

BOLLARD EYE BOLT

- ☐ SINGLE . . . . . **BEB**
- ☐ DOUBLE **BEB/2-180**

Sun Valley Lighting

660 West Avenue O, Palmdale, CA 93551
Phone (661) 233-2000 Fax (661) 233-2001
www.usaltg.com

SUN VALLEY LIGHTING